1 Foreword

1.1 General instructions

This guide will help you to use the RUD sprocket wheel safely, properly and profitably. When you follow the instructions in this guide, you will

- Increase the reliability and service life of the RUD sprocket wheel and the system
- Avoid dangers
- Reduce repairs and down times

This guide must

- **Be available at all times at the place of use**
- **Be read and followed by everyone who works on the RUD sprocket wheel**

The RUD sprocket wheel has been manufactured according to the state-of-the-art and in compliance with the recognized safety rules. However, improper handling or use for other than intended purpose may endanger the life and limb of the user or third parties and/or damage the conveyor system or other tangible assets.
Spare parts must fulfill the technical requirements specified by RUD Ketten. This is guaranteed in the case of original spare parts as they are subjected to continuous quality control by a quality management system certified under ISO 9001. Third party spare parts may, under certain circumstances, change the specified design characteristics of the system and lead to serious defects which, in such a case, would not be the responsibility of RUD Ketten.
Use a suitably equipped workshop for performing maintenance work. Only the manufacturer can guarantee to carry out a professional overhaul or repair.
This guide has been drawn up with the greatest possible care. However, if you would like further information, please contact:

RUD Ketten
Rieger & Dietz GmbH u. Co. KG
Friedensinsel
73432 Aalen/Germany
Telephone +49 7361 504-0
Fax +49 7361 504-1523
rudketten@rud.com
www.rud.com

© 2007.
This guide is copyright protected. RUD Ketten reserves the right to make changes.

1.2 Use for the Intended Purpose

- The RUD sprocket wheel is used as means of driving bulk material conveyors.
- In stationary operation, the permitted power transfer through the sprocket wheel when conveying a specific material at a specific speed and with an appropriate distance between axes is specified in the order placed with RUD and in the confirmation of order by RUD. Any other use or use going beyond the intended use – for example higher conveying capacities or speeds, conveying other materials, or use under unapproved operating conditions – shall be regarded as use for other than the intended purpose.
- Usage for the intended purpose also includes complying with this fitting and operating guide, and complying with the inspection and maintenance specifications.

The manufacturer shall not be liable for damage resulting from usage for other than the intended purpose. The user shall bear the risk alone.

2 Safety Instructions

2.1 Explanation of Symbols and Notices

Warning!	**Danger to life and limb, or substantial material damage can occur if the appropriate safety instructions are not followed.**
Attention!	**Undesirable consequences or working conditions can arise if the appropriate safety instructions are not followed.**

2.2 General

Warning!	**Follow the safety instructions.** **Otherwise there is danger to the life and limb of the user and third parties, and of damage to the machine and other tangible assets.**

- Mounting, dismounting, repairs, overhauls, and wear measurement may only be performed by competent persons who are familiar with the operating manuals and trained people.

- Inform the operating personnel and appoint supervisors before starting maintenance work.
- Secure machines and equipment against being started unintentionally.
- Switch off the main control systems, remove keys, and attach warning notices.

- Before mounting/dismounting work, secure the chain strand against movement. When mounting/dismounting chain equipment, a one-sided load can set the chain in motion and cause injuries which may prove to be fatal.

- Protect the working area against falling materials and components.

- When mounting and replacing individual parts or larger modules, attach and secure them carefully to the lifting equipment so that they cannot become a source of danger. Only use suitable and technically faultless lifting equipment and load hitching tackle.
- Do not stand or walk under suspended loads.

- As a rule, all components must be mounted and dismounted in an electrically dead state, unless otherwise stated. Risk of crushing!

- All parts of the plant must have cooled down to the extent that they can be touched without causing burns.

RUD Ketten Rieger & Dietz GmbH u. Co. KG • Friedensinsel • 73432 Aalen • Germany • www.rud.com

- Appoint only operating personnel with valid certificates of entitlement to hitch loads and instruct crane drivers. The spotter must remain in view of the operator or be in voice contact with him.

- The platforms provided and climbing aids complying with safety regulations must be used for assembly work above head height. Do not use machine parts as climbing aids. Wear protection against falling when performing maintenance work at great heights.

- Operating and process materials must be disposed of safely and in a way that does not harm the environment.

- As a matter of principle, no welding work is permitted to be done on round steel chains, chain couplings or case-hardened module components. The chain must not be used as a ground connection to the steel structure for electric welding.

- Welding, burning and grinding work may only be performed on the plant when this has been expressly authorized. Before starting welding, burning or grinding work, clean the plant and its surroundings of dust and combustible materials, and ensure adequate ventilation. There could, for example, be a risk of fire or explosion.

- Ensure that screw connections are tightened with the defined torque. Always check these connections with a torque wrench.

- Persons are not allowed to ride on the conveyor.

- For safety reasons, it is forbidden to make any modifications or alterations to the components without the manufacturer's authorization.

- All methods of working which are of questionable safety are forbidden.

- In addition to the operating instructions, comply with and implement the generally applicable, legal and other binding accident prevention and environmental protection regulations. For example, the handling of hazardous substances and the provision and wearing of personal protective clothing and equipment.

2.3 Care and Maintenance

- Wherever necessary, cordon off the maintenance area, allowing a wide safety margin.

- Before starting maintenance work, cordon off the working area of the machine/equipment to prevent the access of unauthorized persons. Attach or put up suitable notices advising of the maintenance work.

- Any material adhering to or remaining in the buckets can come loose and fall out. Switch off the material feed, and empty the bucket elevator before opening the inspection flaps. Wear a safety helmet while working.

3 Description

The wheel hub is ready for mounting, and drilled and grooved to fit.

3.1 Model A

The wheel is finish-machined, hardened overall, and the hub cannot be remachined.

3.2 Model B

Partially surface carburized. The wheel body has been welded, and the hub can be remachined. The hubs of unhardened wheel models A and B can be remachined.

Scope of supply: Sprocket wheel, one-piece

The main parts (figure 1) are:

- Sprocket wheel **20**

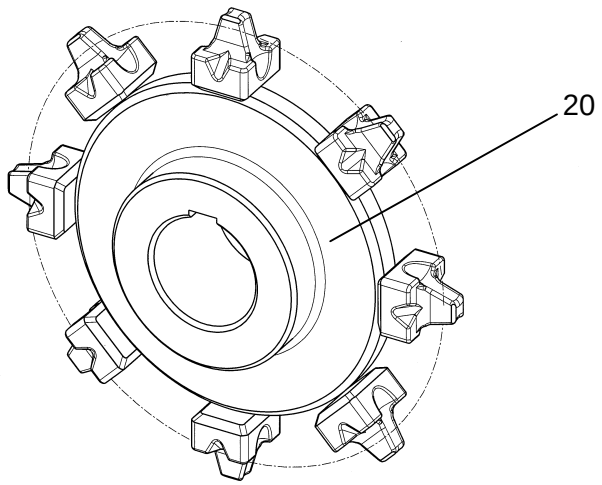

4 Mounting and Operating Instructions

1. Shrink the sprocket wheel onto the corresponding shaft in accordance with the state-of-the-art. Ensure that the contact surfaces are clean and free of burrs.
2. Secure the length of chain against slipping sideways.
3. Ensure that the wheels are fitted with their teeth parallel.
4. If wet and sticky material is to be conveyed, we recommend fitting additional clearing fingers to keep the horizontal chain rests free of material.

Attention!

If the sprocket wheel is used as a guide wheel, then, in the case of multistranded conveyors, no more than two sprocket wheels may be mounted on a guide wheel shaft, and at least one of them must be able to turn freely. This prevents the chain loops stressing each other.

Tk Ø = pitch diameter

H = enveloping circle
H < Tk Ø + 1.2 • ba

ba = external chain width

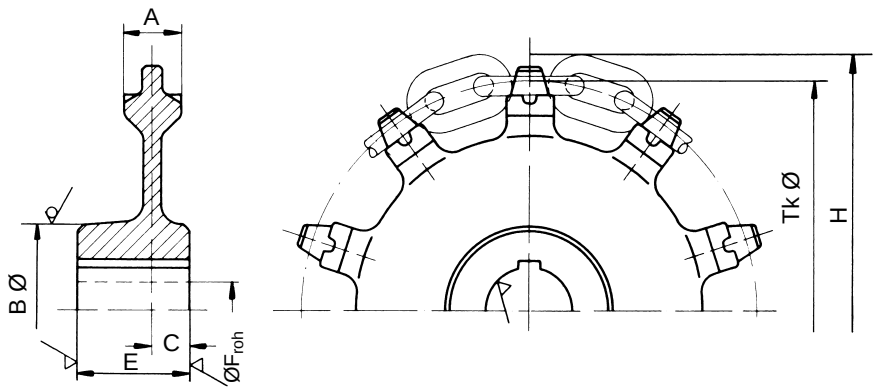

5 Care and Maintenance

5.1 Lubrication

Under normal circumstances, RUD conveyor chains do not require any lubrication.
The chains may only be lubricated with standard engine oil. Grease must not be used.
Dirty chains should be cleaned before being lubricated.

5.2 Monitoring

Examine the sprocket wheels every six months, or at least annually, for damage, corrosion and wear in unusual places. Pay particular attention to the condition of the screw connections and safety components.
Rectify all defects found without delay.

RUD Ketten Rieger & Dietz GmbH u. Co. KG • Friedensinsel • 73432 Aalen • Germany • www.rud.com

6 Wear and Replacement State of Wear

Under normal conditions, wheel teeth and round steel chains reach a replacement state of wear at the same time.

This is reached when the measured pitch of the chain resulting from wear has increased by 1.5% – 2.5% (or more), and at the same time under normal chain take-up tension the chain links engage jerkily with the drive wheel under compulsion and disengage with difficulty or suddenly, that is they are taken past the normal disengagement point.

With long distances between axles and when conveying very abrasive or corroding material, at high conveyor speeds, and/or under the effects of heat and similar conditions, the chain may engage and disengage jerkily with the drive wheel although the measured pitch increase resulting from wear is still less than 1.5%.

Attention!

Sprockets must always be replaced when damage occurs which directly or indirectly endangers the safety or operation of the system.
At the same time, change the teeth on all the drive wheels.
On principle, new round steel chains may only be used with new wheel teeth.

6.1 When Wear Lengthens the Chain Pitch (Fig. 3 Page 7)

Characteristics:
- Uneven running
- The rear flank of the tooth becomes crescent-shaped
- There is no longer any flank clearance
- The drive vibrates strongly
- The chain does not drop onto the link rests of the teeth until it has passed several teeth.

Cause
Heavy wear on teeth and/or chain.

Remedy:
Depending on the overall degree of wear, fit special teeth with a higher link rest, or a new chain and replace badly worn individual teeth.

RUD Ketten Rieger & Dietz GmbH u. Co. KG • Friedensinsel • 73432 Aalen • Germany • www.rud.com

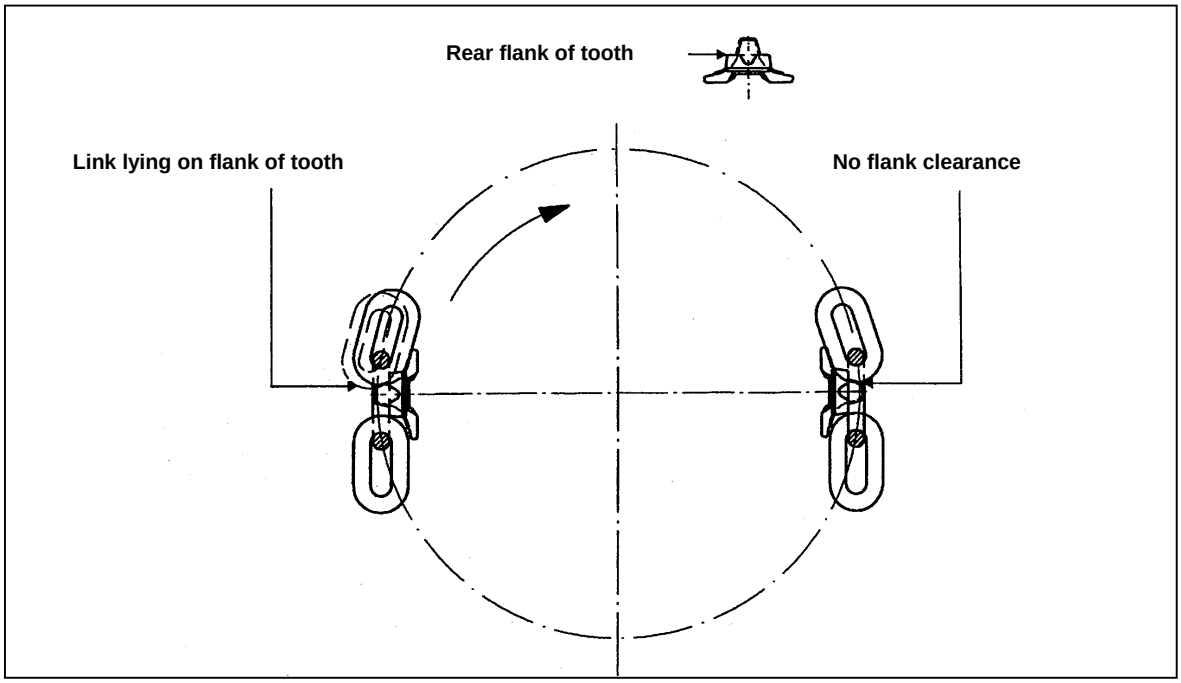

6.2 Chain of Theoretical Nominal Length (Fig. 4)
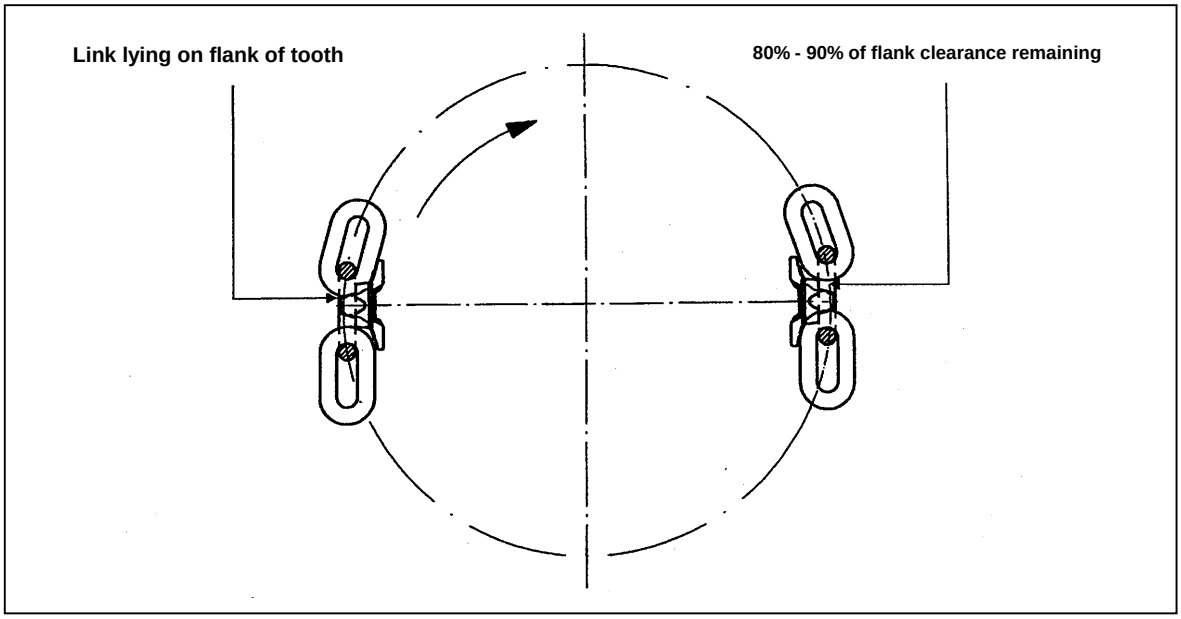
Characteristics:
Smooth, jerk-free running. The first entering tooth entrains the vertical chain link.
The last entering tooth has a residual flank clearance of ca. 80-90%.