# 1 Foreword

## 1.1 General instructions

This guide will help you to use the RUD attachment safely, properly and profitably. When you follow the instructions in this guide, you will

- Increase the reliability and service life of the RUD attachment and the system
- Avoid dangers
- Reduce repairs and down times

**This guide must**

- **Be available at all times at the place of use**
- **Be read and followed by everyone who works on the RUD attachment**

The RUD attachment has been manufactured according to the state-of-the-art and in compliance with the recognized safety rules. However, improper handling or use for other than intended purpose may endanger the life and limb of the user or third parties and/or damage the conveyor system or other tangible assets.
Spare parts must fulfill the technical requirements specified by RUD Ketten. This is guaranteed in the case of original spare parts as they are subjected to continuous quality control by a quality management system certified under ISO 9001. Third party spare parts may, under certain circumstances, change the specified design characteristics of the system and lead to serious defects which, in such a case, would not be the responsibility of RUD Ketten.
Use a suitably equipped workshop for performing maintenance work. Only the manufacturer can guarantee to carry out a professional overhaul or repair.
This guide has been drawn up with the greatest possible care. However, if you would like further information, please contact:

**RUD Ketten**
**Rieger & Dietz GmbH u. Co. KG**
**Friedensinsel**
**73432 Aalen/Germany**
**Telephone +49 7361 504-0**
**Fax +49 7361 504-1523**
**rudketten@rud.com**
**www.rud.com**

© 2007.
This guide is copyright protected. RUD Ketten reserves the right to make changes.

## 1.2 Use for the Intended Purpose

- The RUD attachment is used as part of a means of conveying bulk materials.
- In stationary operation, the permitted power transfer through the RUD attachment when conveying a specific material at a specific speed and with an appropriate distance between axes is specified in the order placed with RUD and in the confirmation of order by RUD. Any other use or use going beyond the intended use – for example higher conveying capacities or speeds, conveying other materials, or use under unapproved operating conditions – shall be regarded as use for other than the intended purpose.
- Usage for the intended purpose also includes complying with this fitting and operating guide, and complying with the inspection and maintenance specifications.

**The manufacturer shall not be liable for damage resulting from usage for other than the intended purpose. The user shall bear the risk alone.**

# 2 Safety Instructions

## 2.1 Explanation of Symbols and Notices

| | |
|---|---|
| **Warning!** | **Danger to life and limb, or substantial material damage can occur if the appropriate safety instructions are not followed.** |
| **Attention!** | **Undesirable consequences or working conditions can arise if the appropriate safety instructions are not followed.** |

## 2.2 General

| | |
|---|---|
| **Warning!** | **Follow the safety instructions.**<br>**Otherwise there is danger to the life and limb of the user and third parties, and of damage to the machine and other tangible assets.** |

- Mounting, dismounting, repairs, overhauls, and wear measurement may only be performed by competent persons who are familiar with the operating manuals and trained people.

- Inform the operating personnel and appoint supervisors before starting maintenance work.
- Secure machines and equipment against being started unintentionally.
- Switch off the main control systems, remove keys, and attach warning notices.

- Before mounting/dismounting work, secure the chain strand against movement. When mounting/dismounting chain equipment, a one-sided load can set the chain in motion and cause injuries which may prove to be fatal.

- Protect the working area against falling materials and components.

- When mounting and replacing individual parts or larger modules, attach and secure them carefully to the lifting equipment so that they cannot become a source of danger. Only use suitable and technically faultless lifting equipment and load hitching tackle.
- Do not stand or walk under suspended loads.

- As a rule, all components must be mounted and dismounted in an electrically dead state, unless otherwise stated. Risk of crushing!

- All parts of the plant must have cooled down to the extent that they can be touched without causing burns.

- Appoint only operating personnel with valid certificates of entitlement to hitch loads and instruct crane drivers. The spotter must remain in view of the operator or be in voice contact with him.

- The platforms provided and climbing aids complying with safety regulations must be used for assembly work above head height. Do not use machine parts as climbing aids. Wear protection against falling when performing maintenance work at great heights.

- Operating and process materials must be disposed of safely and in a way that does not harm the environment.

- As a matter of principle, no welding work is permitted to be done on round steel chains, chain couplings or case-hardened module components. The chain must not be used as a ground connection to the steel structure for electric welding.

- Welding, burning and grinding work may only be performed on the plant when this has been expressly authorized. Before starting welding, burning or grinding work, clean the plant and its surroundings of dust and combustible materials, and ensure adequate ventilation. There could, for example, be a risk of fire or explosion.

- Ensure that screw connections are tightened with the defined torque. Always check these connections with a torque wrench.

- Persons are not allowed to ride on the conveyor.

- For safety reasons, it is forbidden to make any modifications or alterations to the components without the manufacturer's authorization.

- All methods of working which are of questionable safety are forbidden.

- In addition to the operating instructions, comply with and implement the generally applicable, legal and other binding accident prevention and environmental protection regulations. For example, the handling of hazardous substances and the provision and wearing of personal protective clothing and equipment.

### 2.3 Care and Maintenance

- Wherever necessary, cordon off the maintenance area, allowing a wide safety margin.

- Before starting maintenance work, cordon off the working area of the machine/equipment to prevent the access of unauthorized persons. Attach or put up suitable notices advising of the maintenance work.

- Any material adhering to or remaining in the buckets can come loose and fall out. Switch off the material feed, and empty the bucket elevator before opening the inspection flaps. Wear a safety helmet while working.

# 3 Description

→ For use under heavy-duty conditions.
→ For twin chain conveyors.
→ Scraper height up to 2.5 x the external width of the chain link. Dependent on operational conditions.
→ Runs over RUD sprocket wheels and grooved wheels.
→ Reversing operation possible.

Standard equipment: Attachment for welding, without scraper bar.

The main parts (figure 1) are:

- Attachment **70**

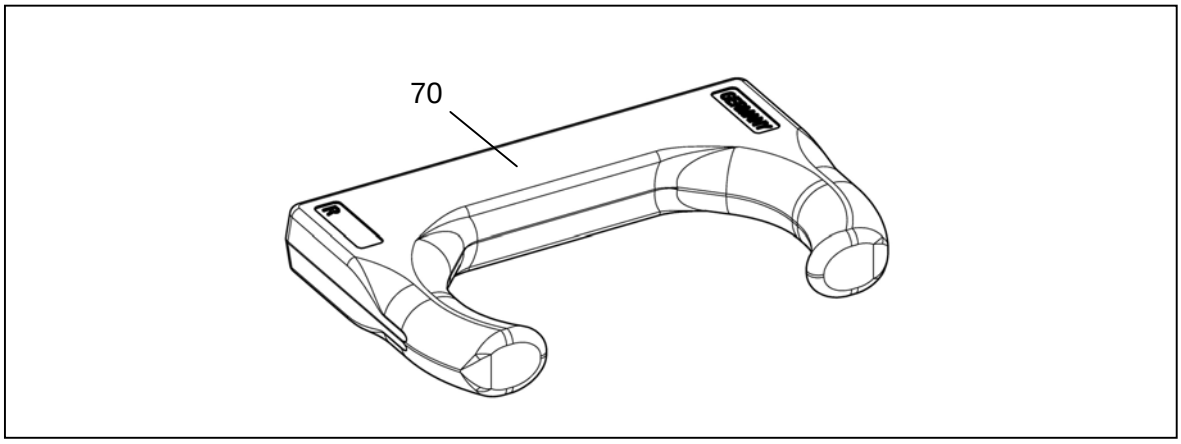


Fig. 1

# 4 Fitting

## 4.1 General welding instructions

This is a general user guide for welding a non-alloyed scraper bar to the RUD Attachment SSRF. This guide is applicable to sizes from 14 x 50 to 38 x 144. The SSRF is a multilink, plug-in attachment for double strand, drag chain conveyors, and has a prepared welding zone. This welding zone is not case-hardened like the surfaces in contact with the chain links. This enables you to weld your own scraper bar to the SSRF.
The SSRF is suitable for heavy-duty operational conditions. We recommend two different types of scraper bar. The decision as to which design is required depends on the material conveyed and the operational conditions.

Attachment material: 20 MnCr 5
Welding rod: EN 440: G 4 Si 1
Electrode: EN 499: E 42 4 B 42 H 5
Comply with electrode drying instructions.

The recommended preheating temperature ranges from 100 to 150°C. The actual temperature mainly depends on the amount of impurities and segregation in the materials, as well as on the thickness of the plate.

The thickness **a** of the weld seam depends on the main parameters of the application (forces, friction, width, length and height of the scraper bar). This means that the thickness of the weld seam has been calculated on the basis of the parameters.

## 4.2 Main application, SSRF with head plate

Figure 2 shows the main application. The SSRF is welded to a non-alloyed head plate. The scraper bar is not welded directly to the SSRF. This design is preferable as it enables a large number of different profiles to be used. For normal use, the thickness **a** of the weld seam should not be less than 4mm for size 19 x 75 and range up to 10mm for size 38 x 144.

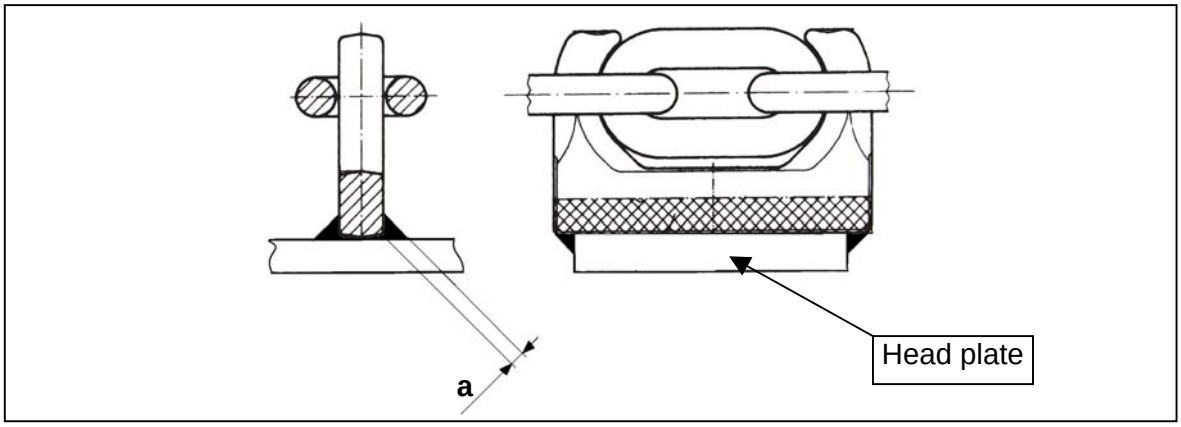


Fig. 2

### 4.3 Application: SSRF welded directly to the scraper bar

Figure 3 shows another design. This is normally used for small SSRFs (sizes 14 x 50 to 26 x 100). For normal use, the thickness **a** of the weld seam should not be less than 3mm for size 14 x 50 and range up to 6mm for size 26 x 100. It is essential that part "A" always has a bevel of 30° on both sides.

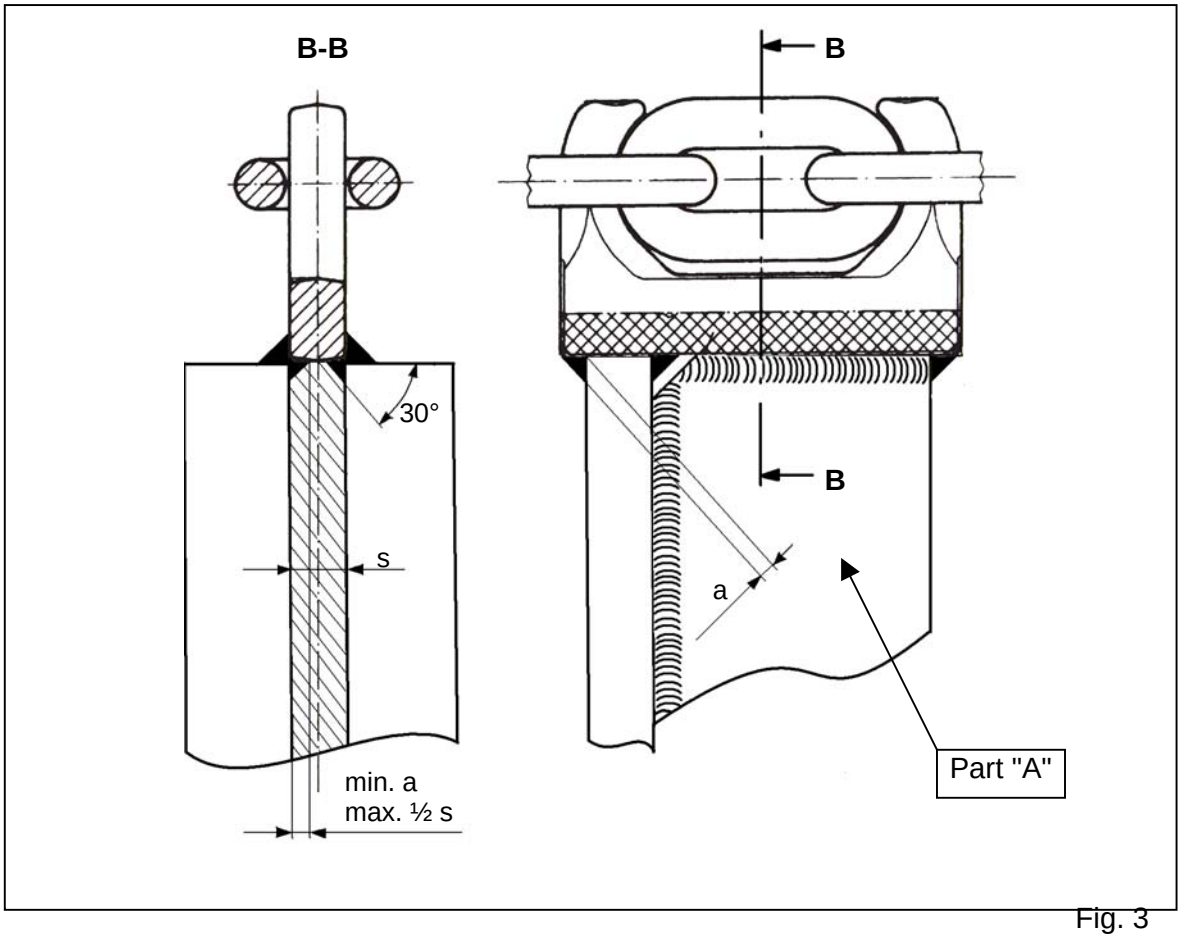


Fig. 3

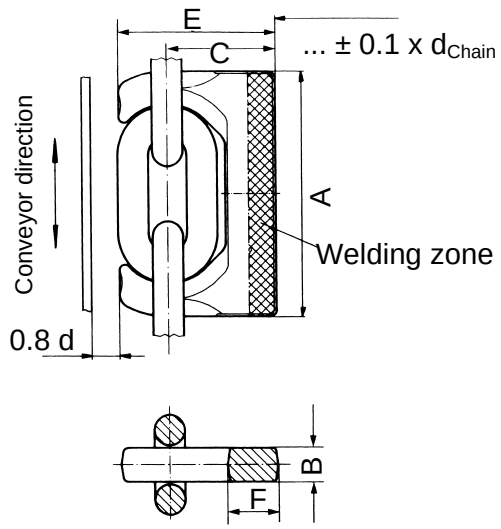


Fig. 4

### 4.4 Fitting the SSRF into the chain

1. Weld to the scraper bar (sections 4.1 to 4.3).
2. Slacken the chain.
3. Push the chain links horizontally or vertically towards each other (figure 5), and insert the plug-in attachment.

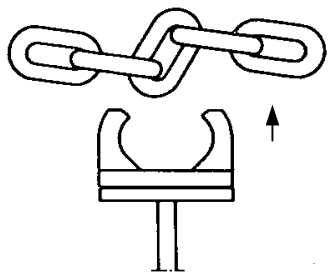

Fig. 5



**RUD Ketten Rieger & Dietz GmbH u. Co. KG • Friedensinsel • 73432 Aalen • Germany • www.rud.com**

# 5 Disassembly

1. Slacken the chain.
2. Push the chain links horizontally or vertically towards each other (figure 5), and remove the plug-in attachment.

# 6 Care and Maintenance

## 6.1 Lubrication

Under normal circumstances, RUD conveyor chains do not require any lubrication.
The chains may only be lubricated with standard engine oil. Grease must not be used.
Dirty chains should be cleaned before being lubricated.

## 6.2 Takeup Tension

Check the tension in the chains regularly, especially during the running-in phase of new chains and/or where the loop lengths are long. The takeup tension must not be greater than that required for the chains and attachments to run faultlessly under normal operating conditions. The takeup tension must be the same in all the chain loops of multistranded conveyors.

**Attention!** **Excessive tension shortens the service life of the chain.**

## 6.3 Monitoring

Examine the attachments every six months, or at least annually, for damage, corrosion and points of unusual wear. Pay particular attention to the condition of the bolted joints and safety components.
Rectify all defects found without delay.

# 7 Wear and Replacement State of Wear

When changing chains, check the attachments for damage, corrosion and points of unusual wear.
If such defects are found, change the attachments or, if necessary, consult RUD Ketten.

**Attention!** **The attachments must always be replaced when damage occurs which directly or indirectly endangers the safety or operation of the plant.**



RUD Ketten Rieger & Dietz GmbH u. Co. KG • Friedensinsel • 73432 Aalen • Germany •
www.rud.com